LOGITECH X-56 THROTTLE / FALCON BMS



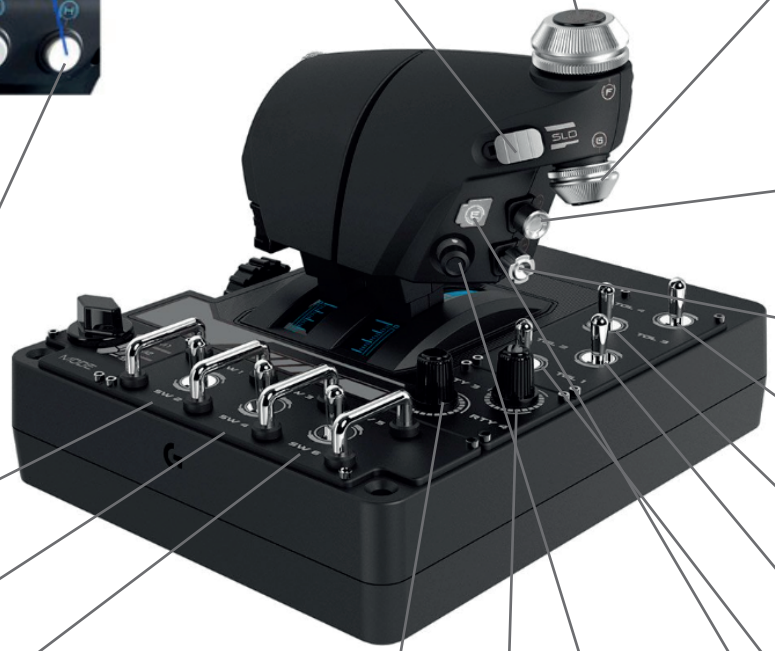

ROTARY FWD/AFT
ROTARY FWD/AFT

RTY_FWD		DX30
RTY_AFT		DX31

ROTARY 1 (G)
TGP CAMERA

JOY_BTN2		
JOY_Z	TGP Zoom Camera	DX2

(SLD) THUMB
SLIDER

JOY_BTN33		DX33

ROTARY 2 (F)
RADAR ANTENNA

JOY_BTN3		
JOY_RZ	TGP Zoom Camera	DX3

K1
MASTER_ARM

BTN_28	ICP: A/A Button Push	DX28
BTN_29.SHF	ICP: NAV Mode	DX28 SHF
BTN_29	ICP: A/G Button Push	DX29

I
SPEED BRAKE

BTN_4	TQS: SPD Brake switch	DX4
BTN_4.SHF		DX4 SHF

H
WHEEL BRAKES

BTN_5	CKPT: Wheel Brakes - Hold	DX5
BTN_5.SHF		DX5 SHF

SW 1 & 2
MASTER_ARM

BTN_6	Master ArmL: ARM	DX6
BTN_7	Master_ARM: OFF	DX7

SW 3 & 4
AUTOPILOT

BTN_8	Roll Switch Cycle	DX8
BTN_9	Pitch Switch Cycle	DX9

SW 5 & 6
STORE CONFIG

BTN_10	Store config Switch CAT I	DX10
BTN_11	Store config Switch CAT III	DX11

(H3) HAT
COMMS

JOY_BTN20	Teamspeak Whisper	DX20
JOY_BTN21	IFF Out	DX21
JOY_BTN22	Teamspeak PTT	DX22
JOY_BTN23	IFF In	DX23

(H4) HAT
DOGFIGHT SWITCH

JOY_BTN24	MRM Dogfight Cancel	DX24
JOY_BTN25	MRM Override	DX25
JOY_BTN26	Dogfight Override	DX26
JOY_BTN27		DX27

TGL 3
MASTER CAUTION

JOY_BTN16		DX16
JOY_BTN17		DX17

TGL 4
MASTER CAUTION

JOY_BTN18	Master Caution Push	DX18
JOY_BTN19		DX19

TGL 1
MASTER CAUTION

JOY_BTN12		DX12
JOY_BTN13		DX13

TGL 1
MASTER CAUTION

JOY_BTN14		DX14
JOY_BTN15		DX15

RTY4
INTERCOM

SLIDER1	INTERCOM Volume	S2

RTY3
COMM CH 1

SLIDER0	COM1 Volume	S1

THROTTLE STICK
DOGFIGHT SWITCH

ROTATION_Y	Radar Cursor Up	DX__
ROTATION_X	Radar Cursor Right	DX__
ROTATION_Y	Radar Cursor Down	DX__
ROTATION_X	Radar Cursor Left	DX__

BUTTON E
BUTTON E

JOY_BTN1	Glance Forward	DX1
JOY_BTN1_SHF	Look Closer	DX1

KEYFILE: BMS_FULL.KEY WITH ALTERNATE LAUNCHER

NAME:	SPYDER_X56_BMS_THROTTLE_AL
CONFIG DEVICE:	LOGITECH X-56 THROTTLE
LAST UPDATE:	2022-06-12 @ 18H40
VERSION:	4.35.3.1
WEB SITE:	WWW.QUEBECAIRFORCE.COM
AUTOR:	JIM «SPYDER» BEATTIE
USER:	PHILIPPE «EDGE» BERTRAND