Saitek / Logitech X-56 HOTAS & MFD

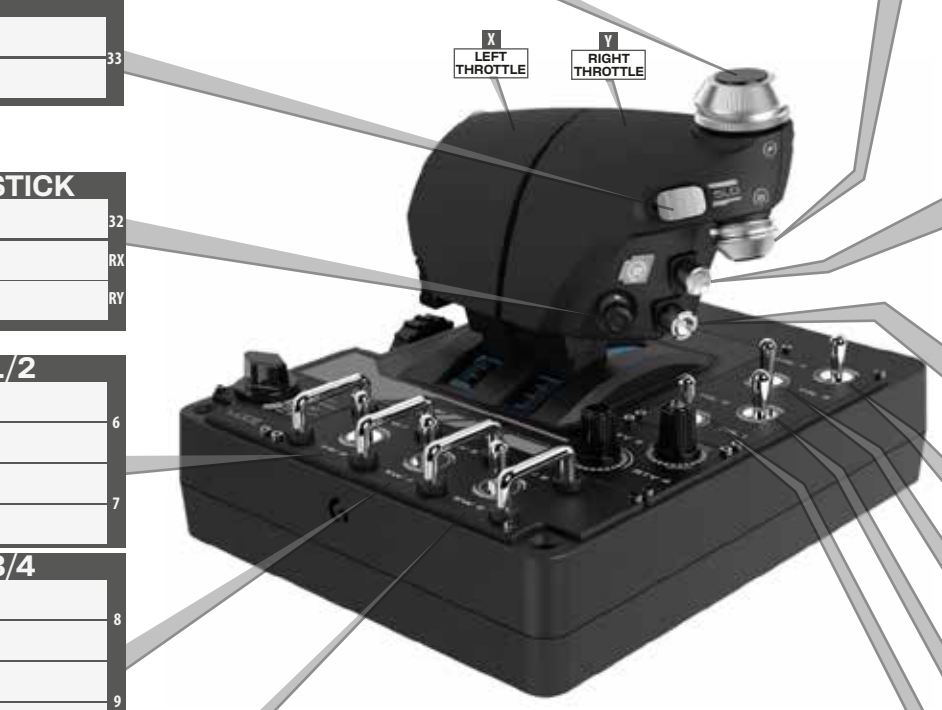



(F) ROTARY 1
2
Z

(G) ROTARY 2
3
RZ

SLD
33

THROTTLE STICK
32
RX
RY

SWITCH 1/2
SW1
6
SW2
7

SWITCH 3/4
SW3
8
SW4
9

SWITCH 5/6
SW5
10
SW6
11

(H3) HAT 3
20
21
22
23

(H4) HAT 4
24 25 26 27

TOGGLE 4
TG4
18
19

TOGGLE 3
TG3
16
17

TOGGLE 2
TG2
14
15

TOGGLE 1
TG1
12
13

Button H
5

Button I
4

Button K1
K1
28
29

All rights reserved © 2026 Jim « Spyder» Beattie
https://www.QuebecAirForce.com

Version: 2.00

Saitek / Logitech X-56 HOTAS & MFD



Button A
2

HAT 1
7
8
9
10

POV

Button B (NWS)
3

Button D
5



PINKY
6

HAT 2
11
12
13
14

Button C - Mini Stick
4
RX
RY

TRIGGER
1

All rights reserved © 2026 Jim « Spyder» Beattie
https://www.QuebecAirForce.com

Version: 2.00

Saitek / Logitech X-56 HOTAS & MFD

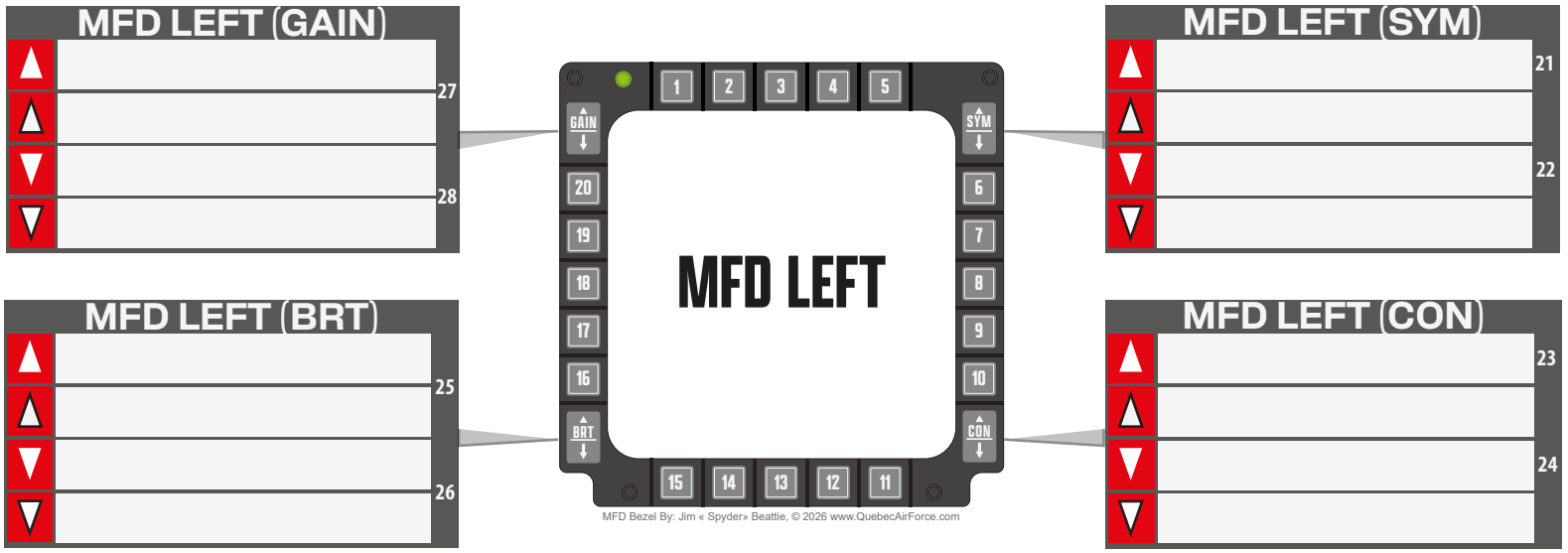

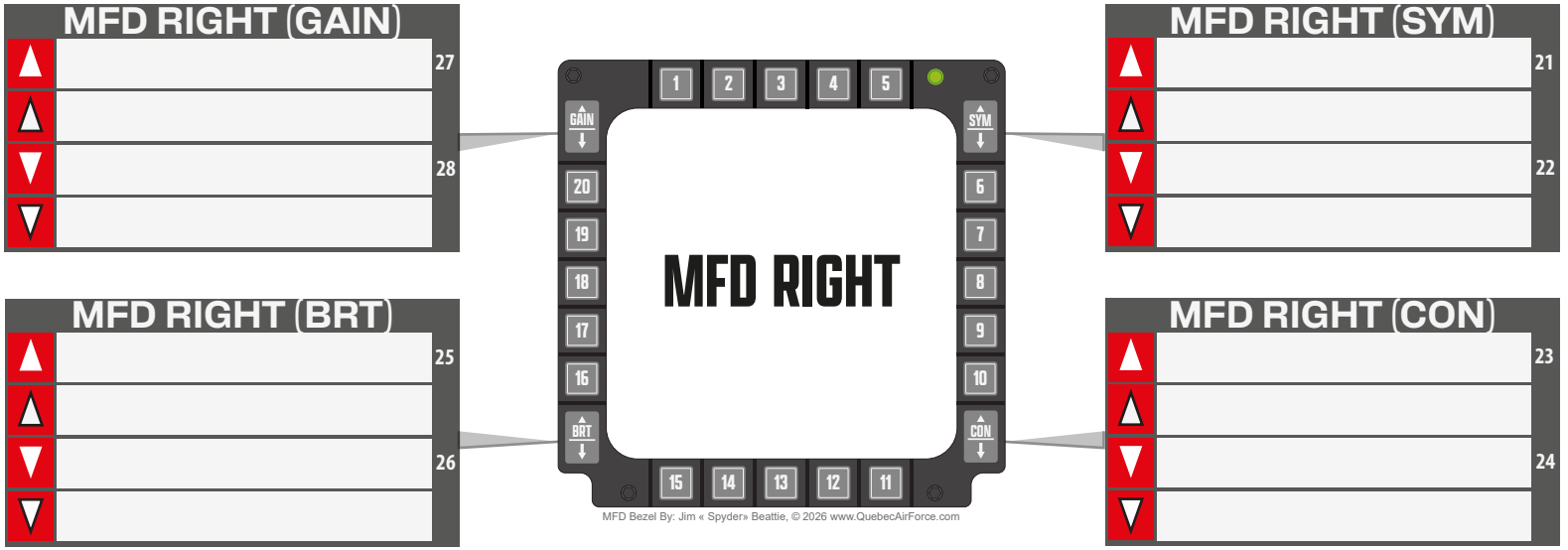

All rights reserved © 2026 Jim « Spyder» Beattie
https://www.QuebecAirForce.com

Version: 2.00